PPC-GS1093T-5G

10.1" RK3399 Hexa-core Processor
Industrial Panel PC

Features:

- RK3399 SOC Cortex dual-core A72 2.0GHz + quad-core A53 1.6GHz quad-core processor
- Industrial display, capacitive touch screen
- 4GB LPDDR3 memory
- USB3.0*2/RS232*4
- HD*1/Gigabit LAN*1
- Full Netcom 5G communication, dual-band WIFI+BT
- Fanless Design

Specifications:

System Hardware			
Chipset	RK3399 Dual Core A72 2.0GHz + Quad Core A53 1.6GHz Processor	Memory	4GB LPDDR3
		Storage	16GB EMMC (optional 32GB/64GB)
Display			
Display screen	10.1″	Contrast Ratio	800:1
Resolution	1280*800	Touch Screen	Capacitive multi-touch screen
Brightness	350 cd/m²		
OS			
OS	Andriod 9		
I/O Ports			
USB	2*USB3.0	Video	1*HD
Serial port	4*RS232 (optional 1~2*RS485)	Expand	1*Mini PCIe
LAN	1*1000M network interface	SIM Card	Support 5G communication, with SIM card
Audio	1*2in1 Audio, 8 ohm 3W speakers*2 (optional)		
Power			
Power Features	12V DC aviation head input (9~36V wide voltage module optional)		

Environment

Reliability	MTBF≥30000h; MTTR≤0.5h	Operating Temp.	-10℃～60℃ Surface air flow
Shock Protection	10g acceleration, 11ms cycle time	Storage Temp.	-20℃ ～70℃
Vibration Protection	5-19Hz/1.0mm amplitude; 19-200Hz/1.0g acceleration	Humidity	95% @40℃, no condensation
		IP Rating	Front panel IP65

Mechanical

Dimension(WxHxD)	268mm*195mm*46.7mm	Material	All metal fanless design
Weight	2.14kg/2.9kg(N.W./G.W.)	Mounting	VESA installation: 100mm*100mm
Color	Black		Embedded installation: 244mm*151.2mm
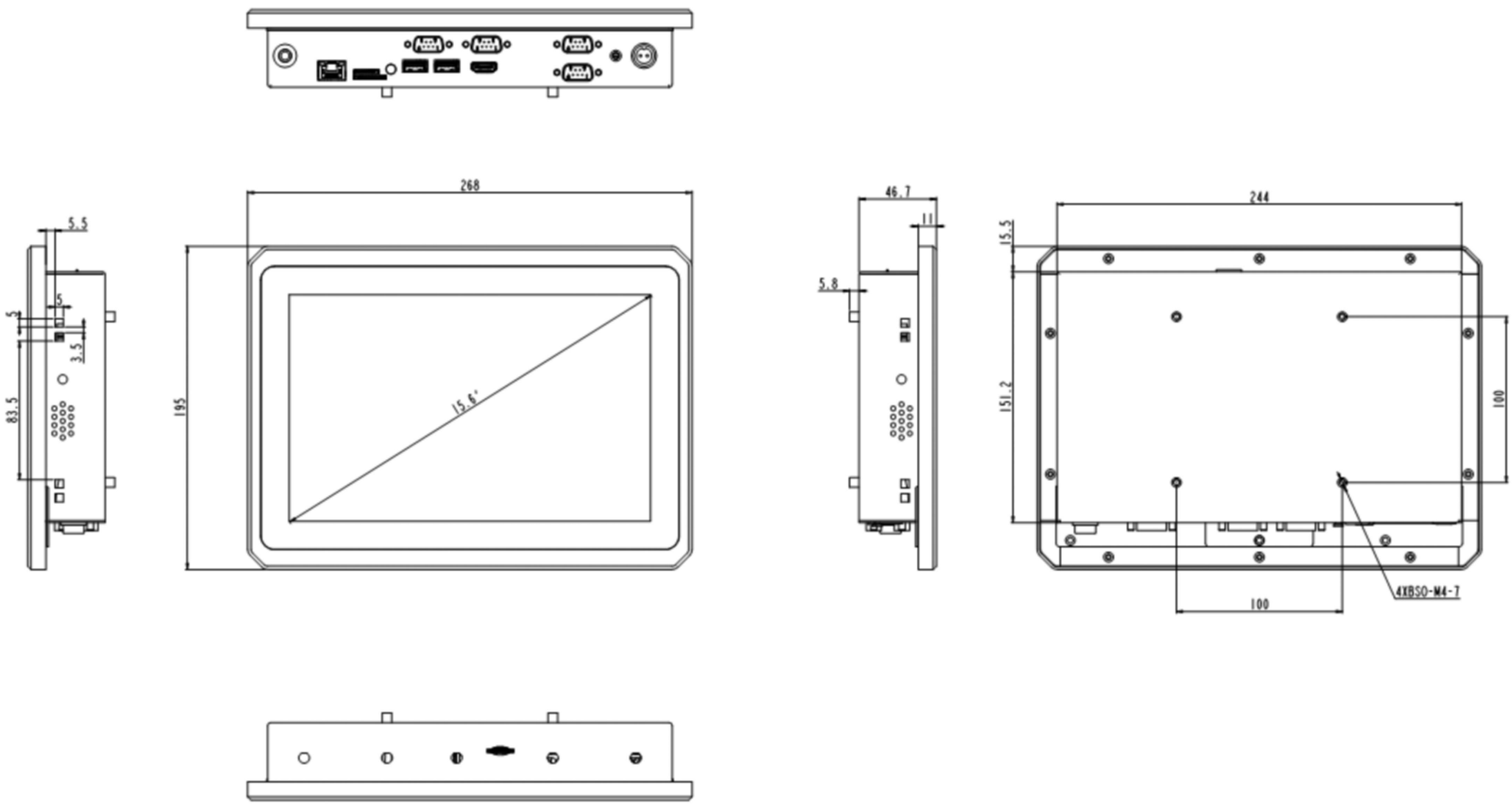
Dimensions: