PC-GS3151A

Intel® J1900 2.0 GHz Low Power Processor
Embedded Box PC

Features:

- Intel® J1900 2.0 GHz Low Power Processor
- Sealed fanless dustproof design
- Standard 2GB DDR3L memory, maximum support 8GB
- 6*USB, 6*serial port, 1*VGA, 1*HD
- 2*Intel I211 Gigabit network interface
- 2*Audio audio interface (Line-out, MIC-in)

Specifications:

System Hardware			
Chipset	Intel® Bay-trail J1900	Watchdog	0-255 seconds/classification is realized by system software
Ram	2GB DDR3L memory, up to 8GB		
Storage	64GB/128GB/512GB SSD (optional)	Power Supply	9-24V DC input (optional 9-36V wide voltage) 10W (standby state) 15W (rated power)
Hardware monitor	Voltage and CPU temperature monitoring		
OS			
OS	Windows 7/8/10、Linux		
I/O Ports			
USB	5*USB 2.0+1*USB 3.0	Display	1*VGA、1*HD
COM	6*RS232 (1-2 optional RS482/RS422)	GPIO	4 input/4 output optional (reduce 1 DB9 COM)
Ethernet	2*Intel® GbE RJ45 1000M	MiniPCIE	1*MINI PCIe(WIFI/BT/4G)
Audio	1*Line-out+1*MIC-in		
Environment			
Vibration Protection	5-19Hz/1.0mm amplitude; 19-200Hz/1.0g acceleration	Operating Temp.	-20℃～60℃, with air flow
		Storage Temp.	-40℃～70℃
Shock Protection	acceleration 10g/11ms	Humidity	95% @40℃, non-condensing
Reliability	MTBF≥50000h; MTTR≤0.5h		
Mechanical			
Dimension (LxWxH)	180mm*148mm*55mm	Material	Aluminum alloy fanless design
Weight	1.1kg/1.3kg(N.W/G.W)	Color	Black
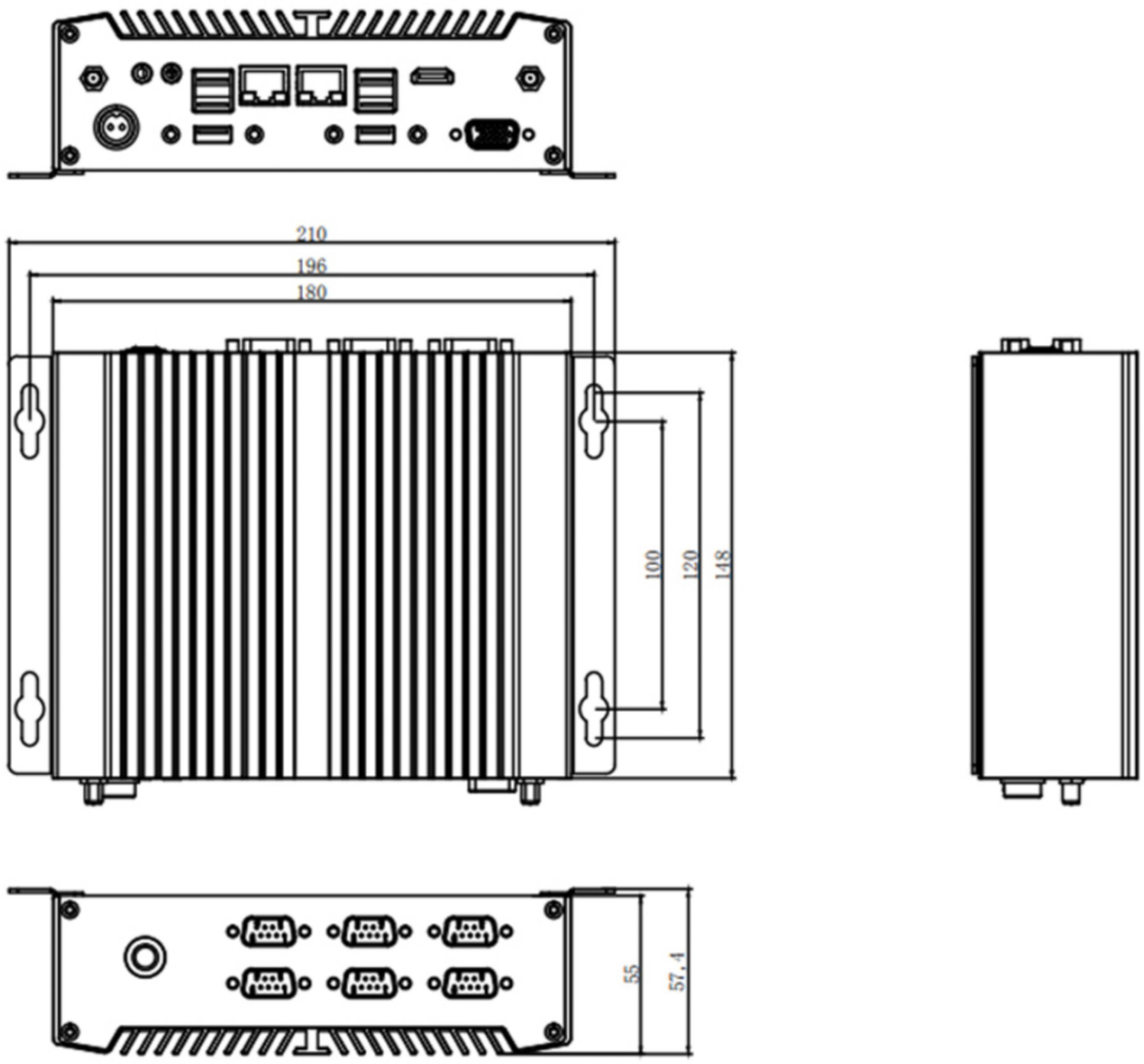
Dimensions: