PC-GS5085

i5-8365U (optional 4205U/i3-8145U) Processor
Embedded Box PC

Features:

- Intel® Core™ 8th generation i5-8365U (optional 4205U/i3-8145U) processor
- Sealed fanless dustproof design
- Standard 4GB memory, maximum support 16GB
- 6*USB/6*serial port/1*VGA/1*HD
- 2*Intel® I211AT Gigabit network interface
- 1*Line-out audio interface

Specifications:

System Hardware

Chipset	i5-8365U (optional 4205U/i3-8145U)	Watchdog	0-255 seconds/classification is realized by system software
Ram	Standard 4GB DDR4-2400MT/s memory, maximum support 16GB	Power Supply	12V DC input (9~36V wide voltage module optional, standard 12/5A power adapter)
Storage	MSATA: 256GB (optional 64GB/128GB)		
Hardware monitor	Voltage and CPU temperature monitoring		

OS

OS	Windows 7/10、Linux

I/O Ports

USB	2*USB 2.0+4*USB 3.0	Display	1*VGA +1*HD
COM	4*RS232+2*RS485	GPIO	1*MINI PCIe
Ethernet	2*Intel® I211AT Gigabit network interface	MiniPCIE	1*Built-in SIM card holder
Audio	1*Line out		

Environment

Vibration Protection	5-19Hz/1.0mm amplitude 19-200Hz/1.0g acceleration	Operating Temp.	-20℃～60℃, with air flow
		Storage Temp.	-40℃～70℃
Shock Protection	acceleration 10g/11ms	Humidity	95% @40℃, non-condensing
Reliability	MTBF≥50000h; MTTR≤0.5h		

Mechanical

Dimension (LxWxH)	211.5mm*196mm*67mm	Material	Aluminum alloy fanless design
Weight	2.44kg/4.10kg(N.W/G.W)	Color	Black
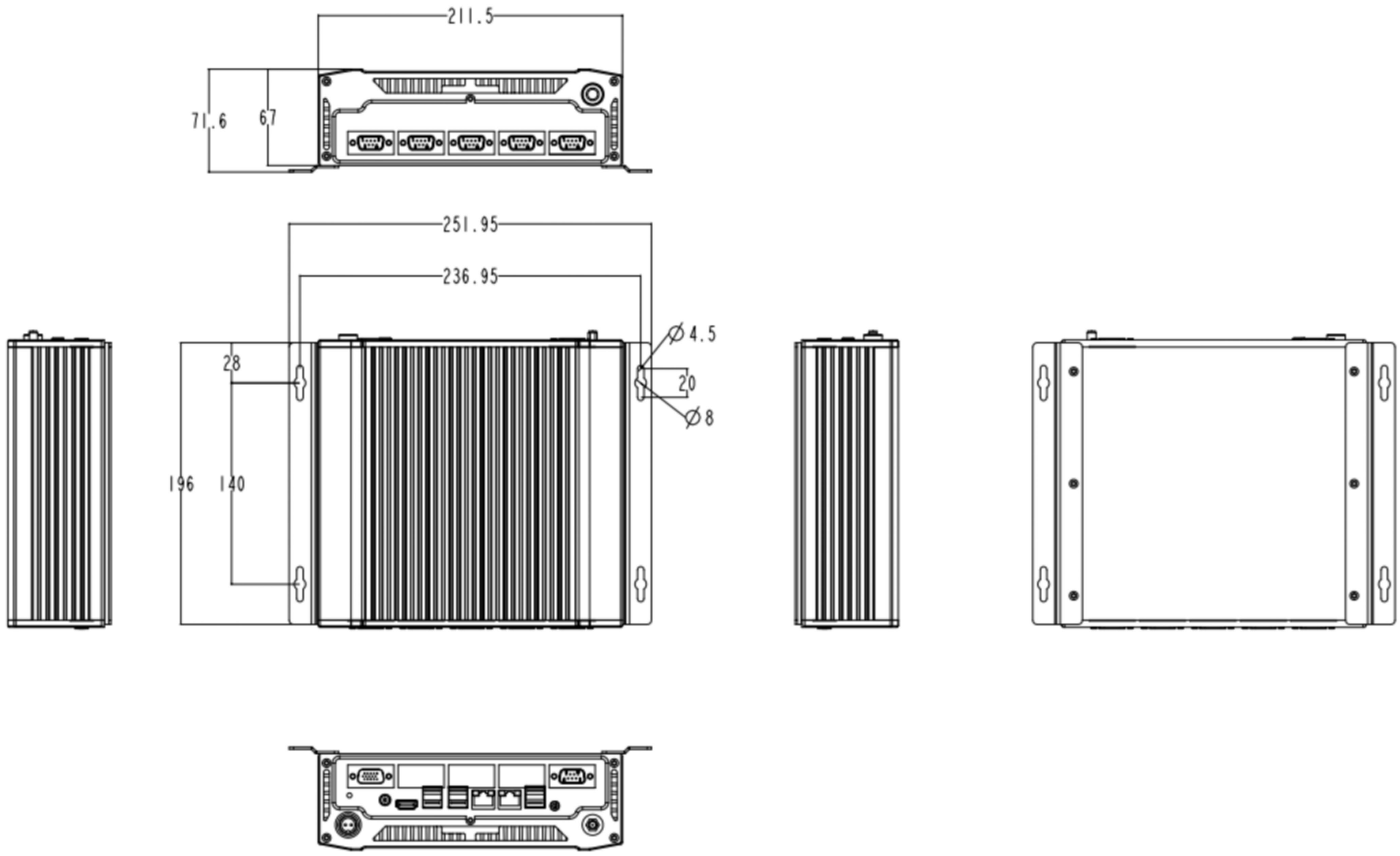
Dimensions: