TR19-51AC

19″ Intel® Bay Trail J1900 2.0GHz Processor
Industrial Panel PC

Features:

- Intel® Bay Trail J1900 2.0GHz processor
- Industrial display, multi-point capacitive touch screen
- 4GB DDR3L memory, maximum support 8GB
- 1*USB3.0, 3*USB2.0, 4*RS232
- 1*HD display interface, 1*VGA
- 2* Intel® Gigabit LAN, 1 of which supports Wake-on-LAN
- Fanless design
- Panel protection level can reach IP65

Specifications:

System Hardware			
CPU	Intel® Bay Trail J1900 quad-core four-thread processor	Watchdog	Support hardware reset function (256 levels, 0~255 seconds)
Memory	4GB DDR3L, up to 8GB	Storage	M.2, 128GB, up to 512GB
Display			
LCD Type	19″ LCD	Luminance	250 cd/m²
Touchscreen Type	Capacitive touch screen	Contrast Ratio	1000: 1
Max. Resolution	1440*900		
OS			
OS	Windows7/10、Ubuntu		
I/O Ports			
USB	1*USB3.0 +3*USB2.0	Mini PCIe	1*Mini PCIe(Wifi/BT/3G/4G optional)
Serial Port	4*RS232 (2*RS485 optional)	SIM card	1* Built-in SIM card holder
Network Port	2* RJ45 Gigabit network interface	M.2	1*M.2 SLOT(2242)
Audio	1*Line-out+1*Mic-in	GPIO	1*GPIO(4in/4out)
Video	1*HD+1*VGA	Expansion port	PCIE/LPC/I2C/2*RS232
DC Port	Phoenix terminal 3pin		
Power			
Power	9-32V wide voltage input, standard 12V/5A adapter (optional adapter for external expansion POE module)		

Environment

Operating Temp.	-10℃～50℃ Surface air flow	Shock Protection	10g acceleration, 11ms cycle
Storage Temp.	-20℃～70℃	Vibration Protection	5-17Hz/1.0mm amplitude; 17-200Hz/1.0g acceleration
Humidity	95% @40℃, non-condensing		
IP Rating	Front panel IP65		

Mechanical

Dimension (WxHxD)	472*320*70mm	Mounting	VESA mounting: 100*100mm
Color	silver		Embedded installation: 459.49*306.4mm
Material	Aluminum alloy		
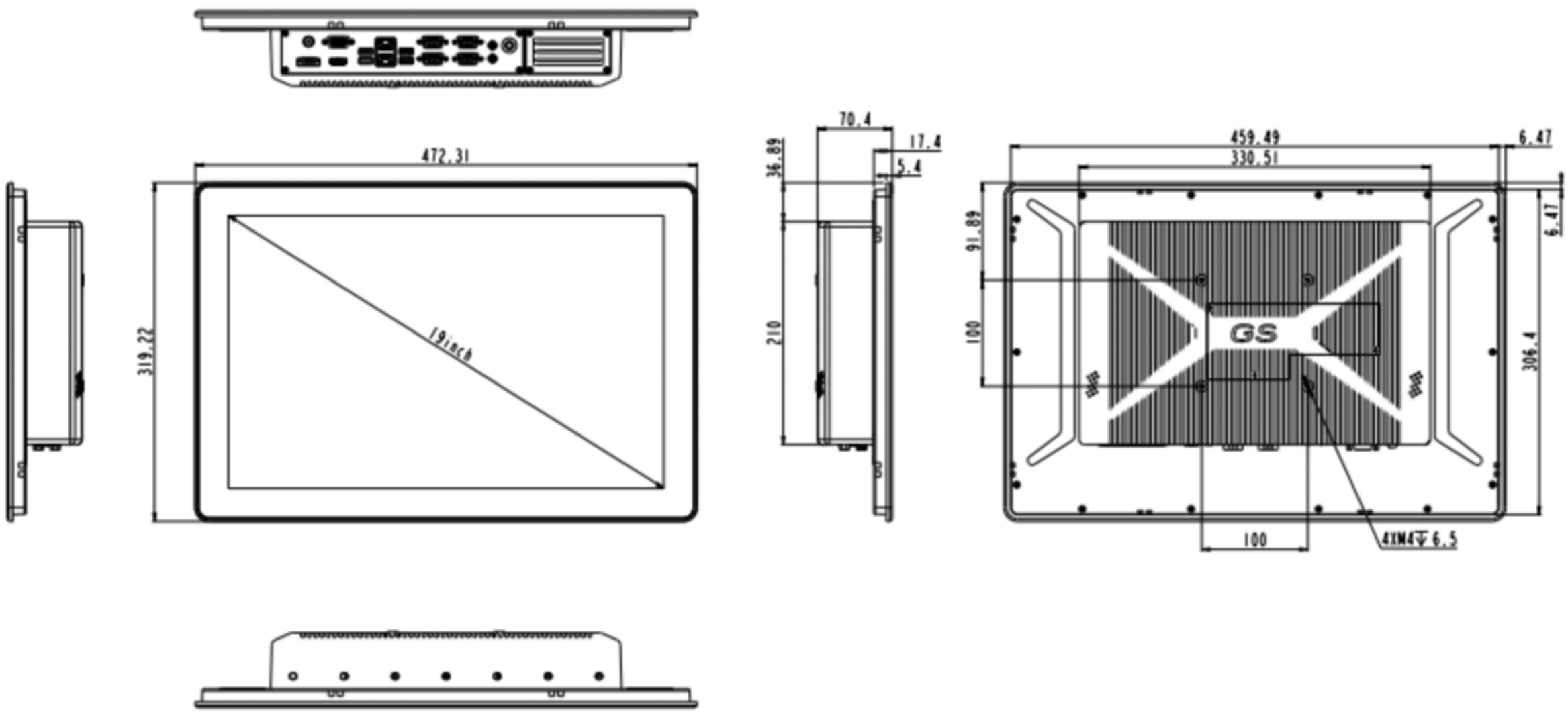
Dimensions: