TY101-GS93A

10.1″ RK3399 Six-core (A72x2+A53x4) Processor

Industrial Panel PC

Features:

- 10.1″ Industrial-grade display with PCAP multi-touch
- RK3399 Hexa-core 64-bit (A72x2+A53x4) 1.8GHz processor
- 2*USB, 2*RS232, 1*HD
- 1* RJ45 Gigabit Ethernet
- Fanless design
- The protection level of the whole panel can reach IP65

Specifications:

System Hardware			
CPU	RK3399 2*Cortex-A72+4*Cortex-A53	Memory	4G LPDDR3
Watchdog	Support hardware reset function (256 levels, 0~255 seconds)	Storage	Standard 16GB eMMC (optional 32GB/64GB)
Display			
LCD Type	10.1″ TFT-LCD	Luminance	350 cd/m^2
Touchscreen Type	10.1" capacitive touch screen	Contrast Ratio	800: 1
Max. Resolution	1280*800		
OS			
OS	Android 7.1		
I/O Ports			
USB	2*USB 3.0	Audio	1*Audio
Serial port	2*RS232, 1*RS485 Optional	WIFI	2.4G/5.0Ghz dual-band
LAN	1* RJ45 Gigabit Ethernet	Video	1*HD
TF	1*TF	BT	BT 4.0
SIM	1*SIM (optional 4G communication)		
Power			
Power Supply	12V DC input (12/5A power adapter; 9-36V DC IN optional)		

Environment

Operating Temp.	-10℃～60℃, without air flow	Reliability	MTBF≥30000h; MTTR≤0.5h
Storage Temp.	-20℃～70℃	Shock Protection	10g/11ms
Humidity	80% @50℃, non-condensing	Vibration Protection	5-19Hz/1.0mm amplitude; 19-200Hz/1.0g acceleration
IP Rating	Front panel IP65		

Mechanical

Dimension (LxWxH)	290*210*51.4mm	Material	Aluminum alloy panel all metal fanless design
Weight	3.88kg/5.05kg(N.W./G.W.)	Mounting	VESA mounting: 100*100mm
Color	Black		Embedded installation: 271.38*192.59mm
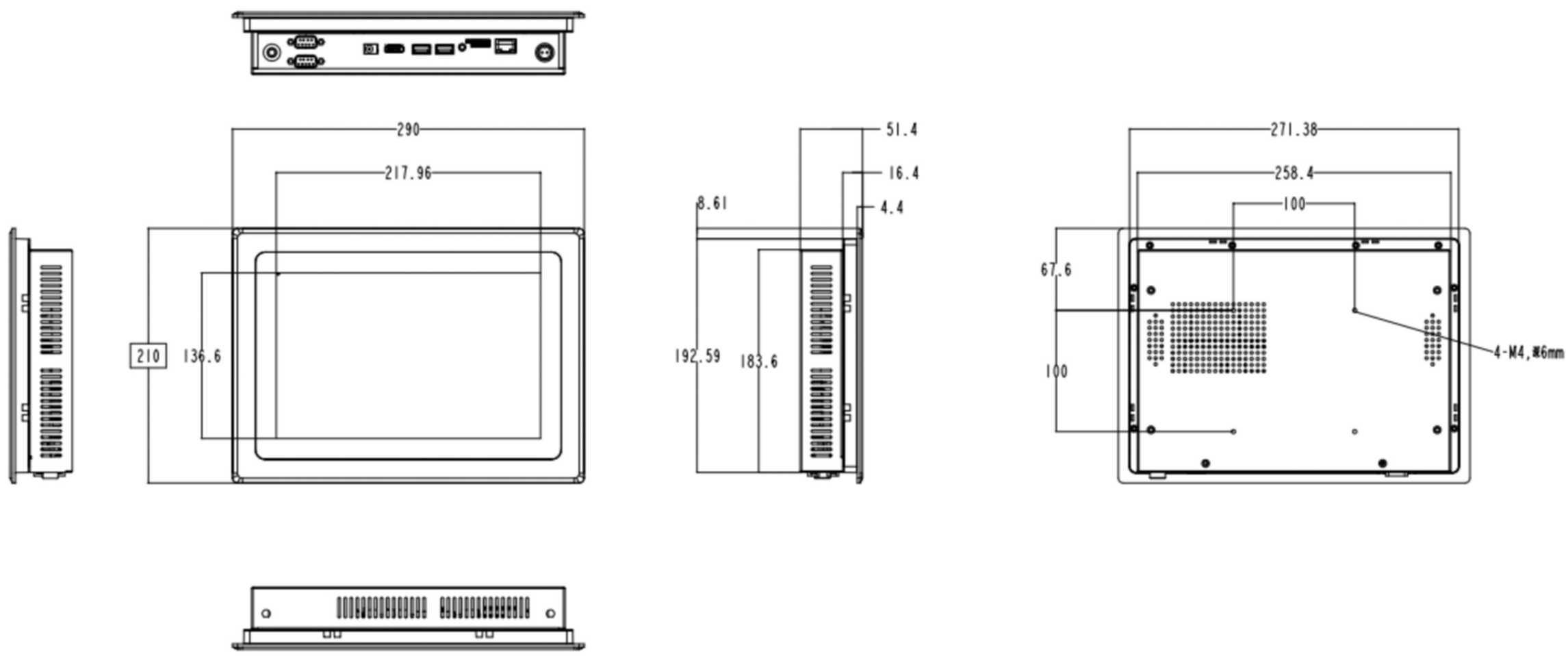
Dimensions: